CE-marked: 2022

Technical documentation



Product information

Art. No: 5205
Product name: Table lamp Torrano
Material: Marble/Travertine, Glass, Metal
Gross Weight: 1pc/6,34kgs
Environment: Indoor

Cable: Transparent cable 200 cm
Classification: Class II Max 40W
Voltage: 220-240V 50-60Hz
Light source: 1xE14 Max 40W
Country of origin: China

Dimensions

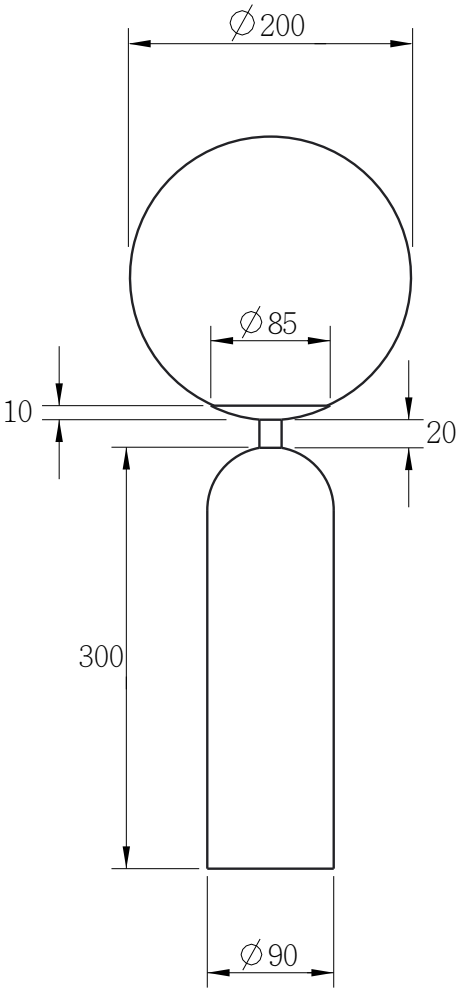

Globen Lighting AB, Viaredsvägen 22, SE504 64, Borås
+46 33 41 62 00 | info@globenlighting.com | www.globenlighting.com

CE-marked: 2022

Technical documentation

Components

parts	Technical Specification	Note
Power supply cord	2*0.75㎜²	
switch	2*2A 250V-T55	0J-304
plug	AC-250V 2.5A	EN50075
lampholder	250V 2A T210℃	

Globen Lighting AB, Viaredsvägen 22, SE504 64, Borås
+46 33 41 62 00 | info@globenlighting.com | www.globenlighting.com

EU Declaration of Conformity (DoC)

We

Company name:	Globen Lighting AB
Postal address:	Sågvägen 10
Postcode:	SE512 50
City:	Svenljunga
Telephone number:	+46 325618080
E-Mail address:	info@globenlighting.se

declare that the DoC is issued under our sole responsibility and belongs to the following product:

Apparatus model/Product:	5205
Type:	Table lamp / Marble, glass
Batch:	
Serial number:	

Object of the declaration (identification of apparatus allowing traceability; it may include a colour image of sufficient clarity where necessary for the identification of the apparatus):



The object of the declaration described above is in conformity with the relevant Union harmonisation legislation:

e.g. Low Voltage Directive (LVD) 2014/35/EU	...
EMC Directive 2014/30/EU	...
...	...
...	...

The following harmonised standards and technical specifications have been applied:

Title, Date of standard/specification:	
SS-EN 60598-1, utg 8:2015	...
SS-EN 60598 - 2 - 4	...
RoHS 2011/65/EU	...
...	...
...	...
...	...

Notified body (where applicable):	**4 digit notified body number:**

Additional information:

Signed for and on behalf of:

Svenljunga	2022-03-04	
Place of issue	Date of issue	Erika Norén Product & Assortment Manager